UNIVERSITY OF CAMBRIDGE INTERNATIONAL EXAMINATIONS
International General Certificate of Secondary Education

CANDIDATE NAME	
CENTRE NUMBER	
CANDIDATE NUMBER	

PHYSICS **0625/21**

Paper 2 Core **October/November 2013**

1 hour 15 minutes

Candidates answer on the Question Paper.

No Additional Materials are required.

READ THESE INSTRUCTIONS FIRST

Write your Centre number, candidate number and name on all the work you hand in.
Write in dark blue or black pen.
You may use a pencil for any diagrams or graphs.
Do not use staples, paper clips, highlighters, glue or correction fluid.
DO **NOT** WRITE IN ANY BARCODES.

Answer **all** questions.
Electronic calculators may be used.
You may lose marks if you do not show your working or if you do not use appropriate units.
Take the weight of 1 kg to be 10 N (i.e. acceleration of free fall = 10 m / s^2).

At the end of the examination, fasten all your work securely together.
The number of marks is given in brackets [ ] at the end of each question or part question.

This document consists of **16** printed pages.

DC (NH/SW) 64825/7
© UCLES 2013

UNIVERSITY of CAMBRIDGE International Examinations

[Turn over

www.root19.com +91 - 9969 353 391

For Examiner's Use

1 A wind turbine can be seen through the window of the IGCSE Physics class laboratory, as shown in Fig. 1.1.

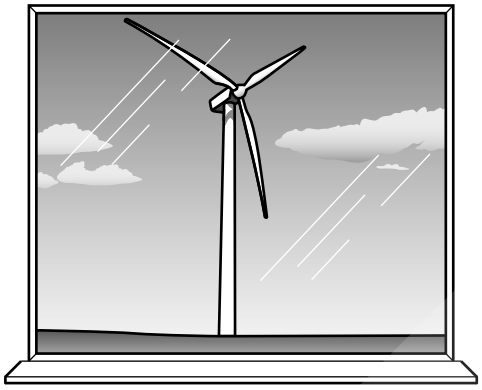

Fig. 1.1

The blades on the wind turbine are turning slowly, so a student uses a laboratory stopclock to time 40 rotations of the blades.

Fig. 1.2 shows the stopclock after 40 rotations of the blades.

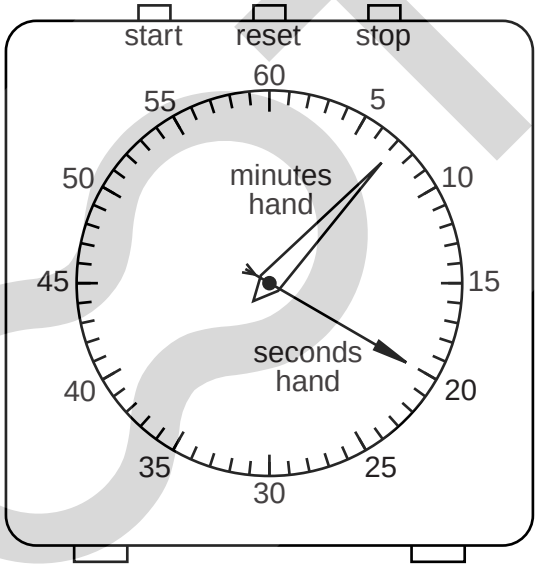

Fig. 1.2

(a) **(i)** State the reading on the stopclock.

reading = ... minutes ..... seconds [1]

(ii) Calculate the time, in seconds, for one rotation of the blades.

time for one rotation = ... s [3]

© UCLES 2013
www.root19.com

+91 - 9969 353 391

For Examiner's Use

(b) Later in the day, the blades of the wind turbine are found to take 15 s to rotate once.

The tip of the blade travels in a circle of circumference 75 m.

Calculate the average speed of the tip of the blade.

average speed = ... m / s [3]

[Total: 7]

© UCLES 2013

www.root19.com +91 - 9969 353 301

For Examiner's Use

2 **(a)** The mass of 35 cm^3 of mercury is measured as 476 g.

Calculate the density of mercury. Give the unit.

density = ... [4]

(b) The density of water is much less than the density of mercury.

How does the mass of 35 cm^3 of water compare with the mass of 35 cm^3 of mercury?

Tick one box.

mass of water is less than mass of mercury ☐

mass of water is the same as mass of mercury ☐

mass of water is greater than mass of mercury ☐

[1]

(c) The mercury in a thermometer expands when it is heated.

(i) What happens to the mass of the mercury? Tick one box.

decreases ☐

stays the same ☐

increases ☐

(ii) What happens to the density of the mercury? Tick one box.

decreases ☐

stays the same ☐

increases ☐

[2]

[Total: 7]

© UCLES 2013
www.root19.com

+91 - 9969 353 391

For Examiner's Use

3 **(a)** State what is meant by the *moment* of a force.

.....

..... [1]

(b) A plank balances horizontally on a log of wood, which acts as a pivot.

A girl sits on one end of the plank, and a boy pushes down on the other end to keep the plank horizontal. Fig. 3.1 shows this arrangement.

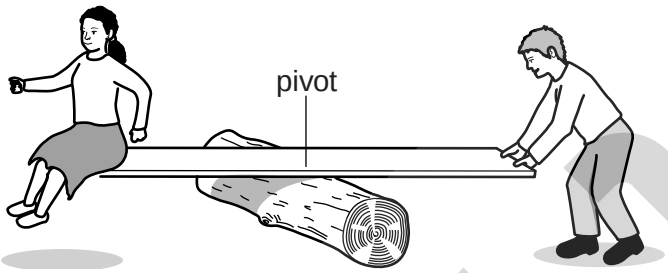

Fig. 3.1

(i) What two things can be said about the moments caused by the boy and by the girl?

1. .....

2. .....

[2]

(ii) There are four forces acting on the plank when it is in equilibrium. Three of the forces are:

- the weight of the girl
- the weight of the plank
- the force provided by the boy

1. Where does the fourth force act?

.....

2. What is the direction of this force?

.....

[2]

[Total: 5]

© UCLES 2013
www.root19.com

+91 - 9969 353 301

For Examiner's Use

4 **(a)** State what is meant by the *frequency* of the vibration of a vibrating object.

.....

..... [2]

(b) Fig. 4.1 shows a tuning fork. Its frequency is indicated by the number on the handle.

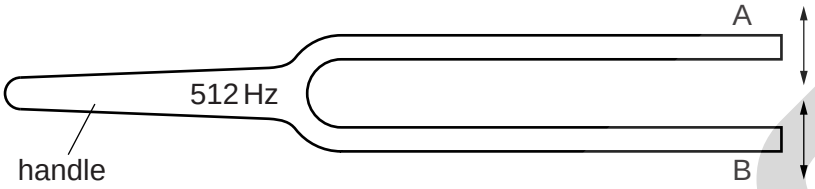

Fig. 4.1

When the tuning fork is struck on a solid surface, the prongs A and B vibrate as indicated by the arrows.

(i) Explain how a sound is produced and transmitted when the prongs are vibrating.

.....

.....

.....

..... [3]

(ii) After the tuning fork was struck on the solid surface, the sound from the tuning fork gradually gets quieter.

State what happens to the tuning fork to cause this.

.....

..... [1]

(iii) Another tuning fork is marked with 256 Hz, to indicate its frequency.

State how the sound from this tuning fork compares with the sound from the tuning fork in Fig. 4.1.

.....

..... [2]

[Total: 8]

© UCLES 2013
www.root19.com

+91 - 9969 353 391

For Examiner's Use

5 The apparatus in Fig. 5.1 is used to investigate temperature rise when some water is heated.

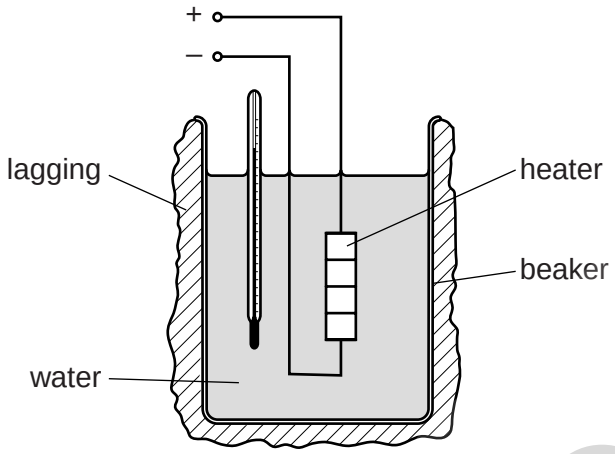

Fig. 5.1

(a) Name the instrument used to measure the temperature of the water.

..... [1]

(b) State the purpose of the lagging.

.....

..... [1]

(c) Describe how the mass of the water may be determined, stating the apparatus you would use.

.....

.....

.....

.....

.....

..... [4]

(d) The heater is switched on and eventually the water starts to boil.

State two things that may be observed about the water when it is boiling.

1. .....

2. .....

[2]

[Total: 8]

© UCLES 2013
www.root19.com

+91 - 9969 353 301

For Examiner's Use

6 **(a)** A ray of red light passes through a rectangular glass block, as shown in Fig. 6.1.

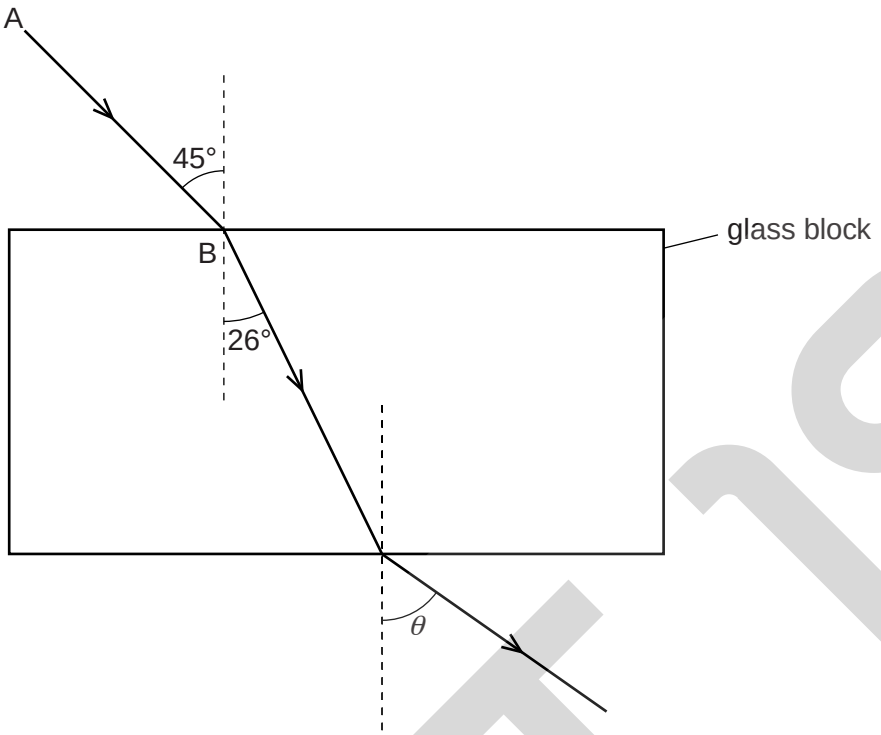

Fig. 6.1

(i) What name describes what happens to the ray of light at B?

.....

(ii) On Fig. 6.1, the emergent ray is not drawn at the correct angle θ to the normal.

State the correct value of the angle θ.

θ = ...
[2]

www.root19.com +91 - 9969 353 391

For Examiner's Use

(b) A ray of blue light is directed into a glass prism, as shown in Fig. 6.2.

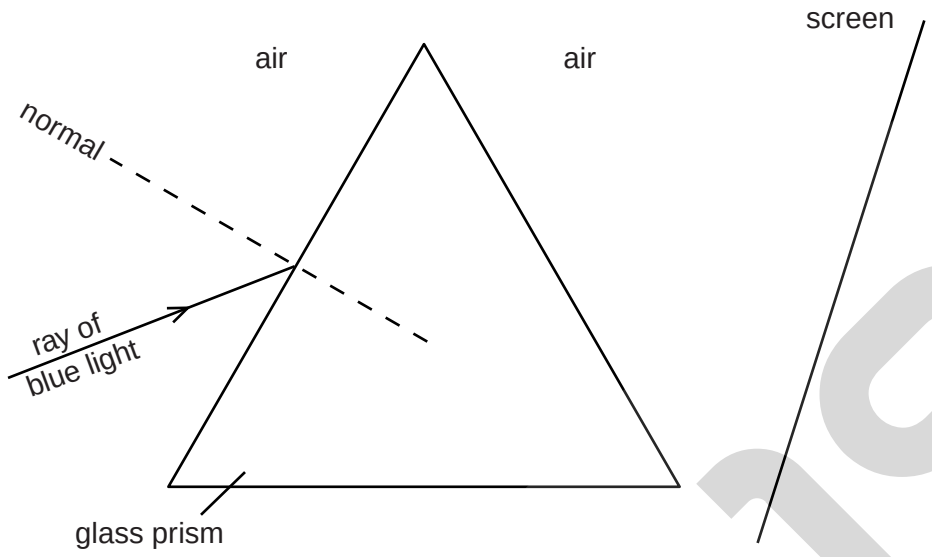

Fig. 6.2

(i) Using your ruler, draw a possible path for the blue light, until it reaches the screen.

(ii) The ray of blue light is replaced by a ray of red light.

On Fig. 6.2, mark an X to show where the red light might hit the screen.

[3]

[Total: 5]

www.root19.com +91 - 9969 353 301

For Examiner's Use

7 Fig. 7.1 is a ray diagram for a converging lens.

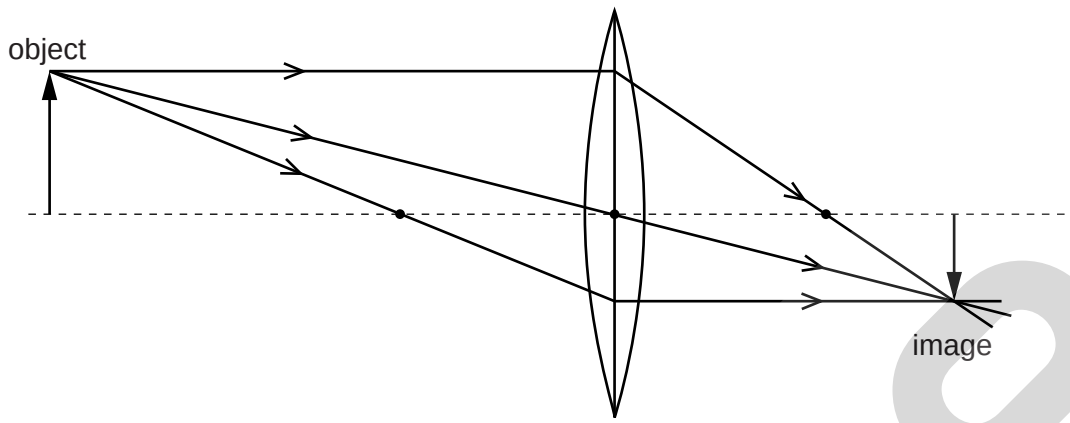

Fig. 7.1

(a) On Fig. 7.1, clearly mark and label

(i) the focal length of the lens,

(ii) one principal focus of the lens (use the letter F).

[2]

(b) The following can be used to describe the image formed by a lens.

enlarged	☐	diminished	☐
inverted	☐	upright	☐
image distance greater than object distance	☐	image distance less than object distance	☐

Put ticks **in the boxes** containing descriptions that apply to the image in Fig. 7.1. [3]

(c) On Fig. 7.1, draw one more ray from the top of the object to the top of the image. [1]

[Total: 6]

© UCLES 2013
www.root19.com

+91 - 9969 353 391

For Examiner's Use

8 Fig. 8.1 shows the outline of a bar magnet. A compass needle is being used to show the magnetic field pattern around the bar magnet. The needle is a small, freely-pivoted magnet.

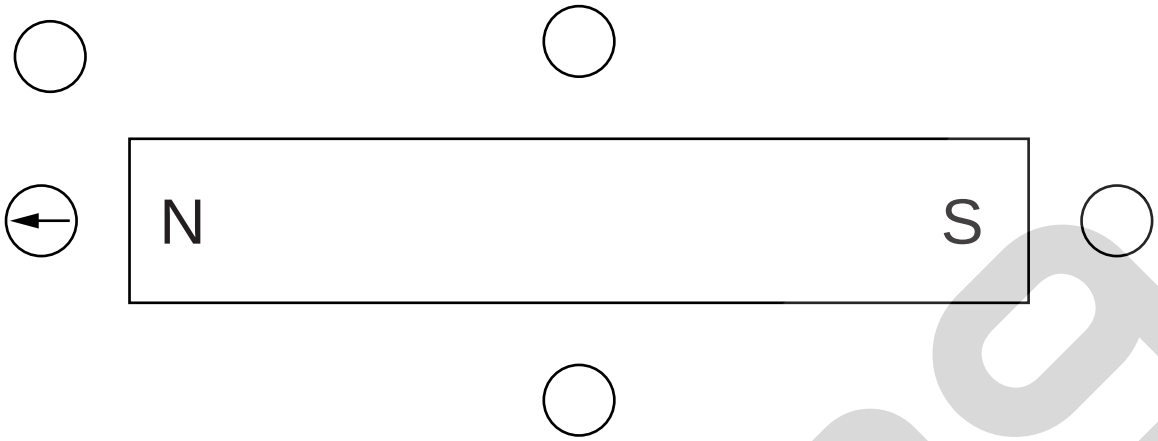

Fig. 8.1

(a) The compass is placed to the left of the N pole of the magnet. Its needle points in the direction shown by the arrow.

Four other positions are indicated around the magnet, each marked by a circle.

In each circle, draw an arrow to indicate the direction in which the compass needle would point at each of these positions. Other magnetic fields can be ignored. [4]

(b) Five pieces of metal are placed, in turn, near the S pole of the magnet.

In the table below tick the box that states what happens to each of the different metals. An example has been given to help you.

type of metal	attracted by magnet	repelled by magnet	no effect
gold			✓
aluminium			
copper			
iron			
steel			

[4]

[Total: 8]

© UCLES 2013
www.root19.com

+91 - 9969 353 301

For Examiner's Use

9 Fig. 9.1 shows a series circuit. The resistances of the ammeter and of the battery may be ignored.

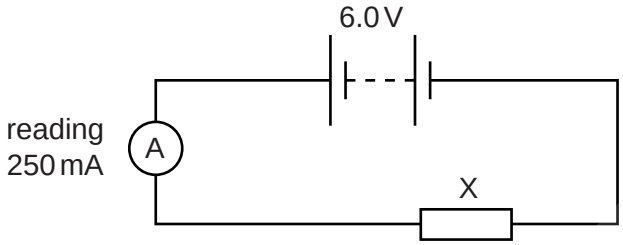

Fig. 9.1

(a) What is component X? Tick one box.

bell ☐

fuse ☐

relay ☐

resistor ☐

[1]

(b) State the value of

(i) the e.m.f. of the battery, ...

(ii) the potential difference across component X, ...

(iii) the current in the circuit. .....

[3]

(c) Use values from Fig. 9.1 to calculate the resistance of component X. Give the unit.

resistance = ... [4]

© UCLES 2013
www.root19.com

+91 - 9969 353 391

For Examiner's Use

(d) A resistor R is connected in parallel with component X.

State what effect, if any, this has on

(i) the total resistance of the circuit,

.....

(ii) the reading on the ammeter,

.....

(iii) the current in component X.

.....
[3]

[Total: 11]

www.root19.com +91 - 9969 353 301

For Examiner's Use

10 The transformer in Fig. 10.1 is to be connected to a circuit containing two electric motors.

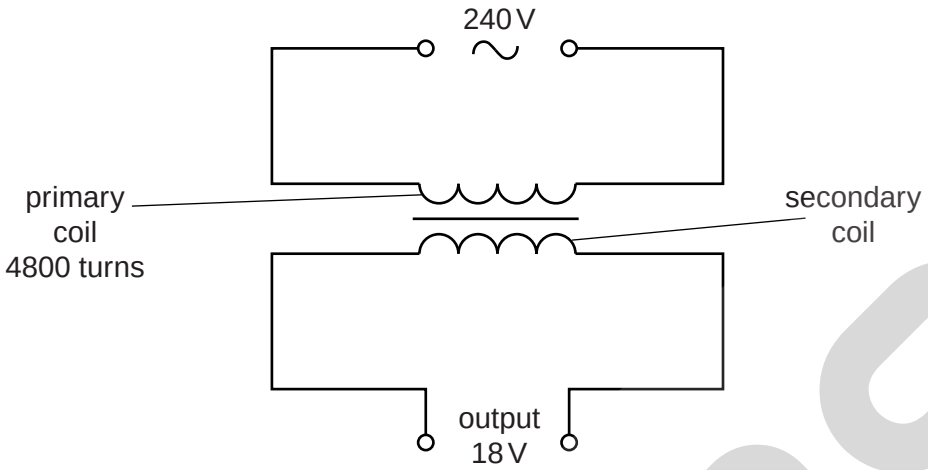

Fig. 10.1

To operate at full speed, each motor requires a voltage of 18 V.

At a lower voltage the motors will operate but at a lower speed.

(a) On Fig. 10.1, draw the two motors connected in parallel across the output of the transformer. Use the circuit symbol (M) to represent each motor. [1]

(b) Calculate the number of turns needed in the secondary coil in order to supply 18 V.

number of turns = ... [3]

(c) The motors are now connected in series across the output of the transformer.

State the effect on the motors.

.....

..... [1]

[Total: 5]

www.root19.com +91 - 9969 353 391

For Examiner's Use

11 A radiation detector is used to monitor the radiation from a radioactive source. A ratemeter records the number of counts per minute.

(a) The source is brought close to the detector. The table below shows how the ratemeter reading varies with time.

time / s	0	20	40	60	80	100	120	140	160	180
ratemeter reading / counts / min	300	230	184	142	108	92	74	60	50	42
count rate due to source / counts / min	280		164		88		54	40	30	22

(i) The bottom row gives the count rate due only to the source.

Fill in the missing values. [1]

(ii) From the table, estimate the half-life of the radioactive source.

half-life = ... s [2]

(b) Even when the source is a long way from the detector, the ratemeter registers a reading of 20 counts / min.

Suggest a cause of this 20 counts / min.

.....

..... [1]

[Total: 4]

Question 12 is on the next page.

www.root19.com +91 - 9969 353 301

For Examiner's Use

12 **(a)** How many protons are in the nucleus of an atom of $^{212}_{84}Po$? ..... [1]

(b) How many neutrons are in the nucleus of an atom of $^{212}_{84}Po$? ..... [1]

(c) **(i)** How many electrons are in a neutral atom of $^{212}_{84}Po$? .....

(ii) Where in the atom are these electrons to be found?

.....
[2]

(d) When a nucleus of $^{212}_{84}Po$ decays by emitting an alpha-particle, it becomes a nucleus of lead (Pb).

The equation below represents this process.

$$^{212}_{84}Po \rightarrow {}^{X}_{Y}Pb + {}^{4}_{2}\alpha$$

Deduce the values of X and Y.

X = ...

Y = ...
[2]

[Total: 6]

Permission to reproduce items where third-party owned material protected by copyright is included has been sought and cleared where possible. Every reasonable effort has been made by the publisher (UCLES) to trace copyright holders, but if any items requiring clearance have unwittingly been included, the publisher will be pleased to make amends at the earliest possible opportunity.

University of Cambridge International Examinations is part of the Cambridge Assessment Group. Cambridge Assessment is the brand name of University of Cambridge Local Examinations Syndicate (UCLES), which is itself a department of the University of Cambridge.

www.root19.com +91 - 9969 353 391